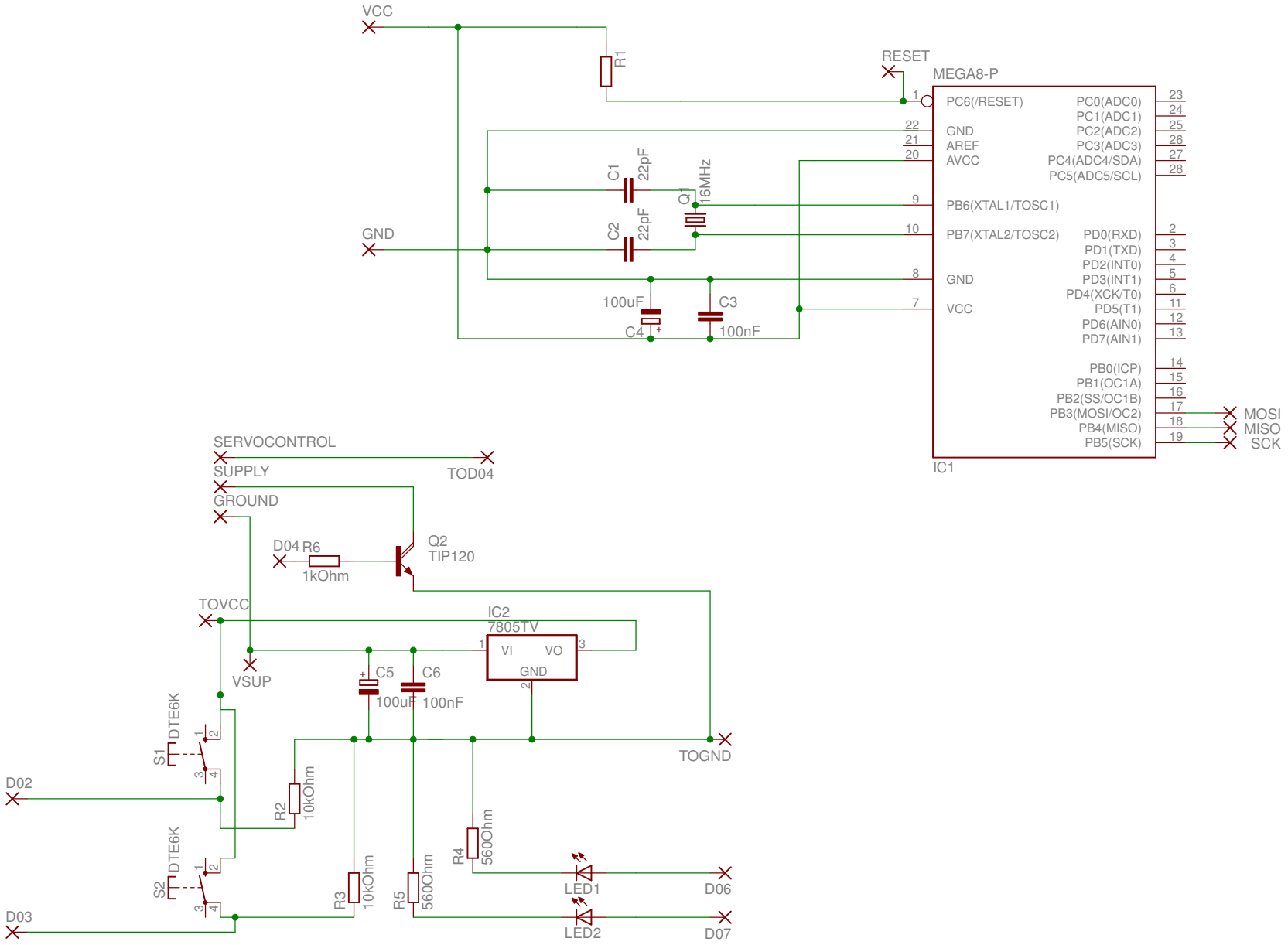
VCC
R1
RESET
MEGA8-P
PC6(/RESET)
GND
AREF
AVCC
PB6(XTAL1/TOSC1)
PB7(XTAL2/TOSC2)
GND
VCC
PC0(ADC0)
PC1(ADC1)
PC2(ADC2)
PC3(ADC3)
PC4(ADC4/SDA)
PC5(ADC5/SCL)
PD0(RXD)
PD1(TXD)
PD2(INT0)
PD3(INT1)
PD4(XCK/T0)
PD5(T1)
PD6(AIN0)
PD7(AIN1)
PB0(ICP)
PB1(OC1A)
PB2(SS/OC1B)
PB3(MOSI/OC2)
PB4(MISO)
PB5(SCK)
MOSI
MISO
SCK
IC1
GND
C1
22pF
C2
22pF
Q1
16MHz
100uF
C4
C3
100nF
SERVOCONTROL
TOD04
SUPPLY
GROUND
D04
R6
1kOhm
Q2
TIP120
TOVCC
IC2
7805TV
VI
VO
GND
VSUP
C5
100uF
C6
100nF
TOGND
S1
DTE6K
D02
R2
10kOhm
S2
DTE6K
D03
R3
10kOhm
R5
560Ohm
R4
560Ohm
LED1
D06
LED2
D07